REVISION RECORD				
REV	ECO	DESCRIPTION	DRFT	CHKD

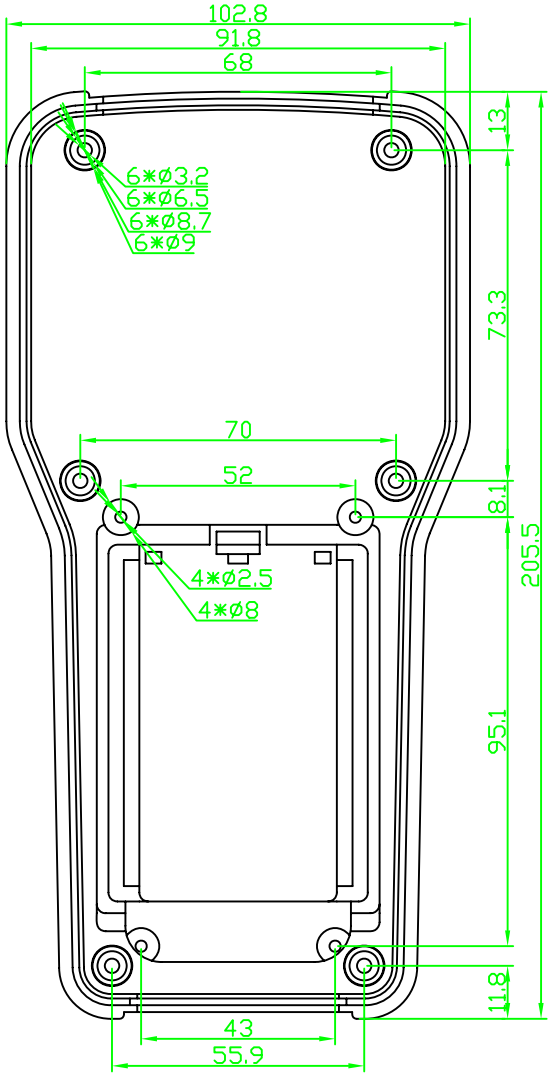

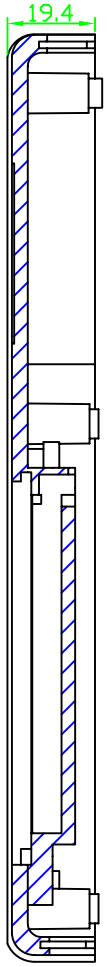

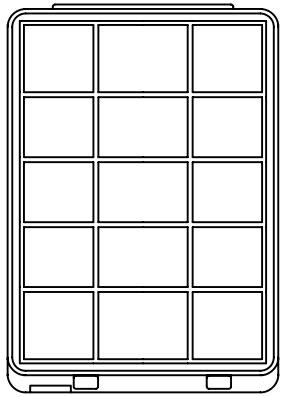

电池盖

DETACHED LISTS	MM (INCH) TOLERANCES EXCEPT AS NOTED: MM .0 ± 0.3 ± .00 ± 0.2 ± .000 ± 0.1 ±	DFTD	DATE
		CHKD	DATE
		MFD	DATE
		APPVL	DATE
		MATERIAL : ABS	
	ANGLES ± 5°	QT'Y :	
	FIRST ANGLE PROJECTION	FINISH:	
		SCALE : 1:1	

EVEREST
WWW.EVEREST CASE.COM

TITLE
PH034

DRAWING NO. PH032
/PART NO. 00

SIZE A4 REV

DO NOT SCALE DRAWING

SHEET 1 OF 1

REVISION RECORD				
REV	ECO	DESCRIPTION	DRFT	CHKD

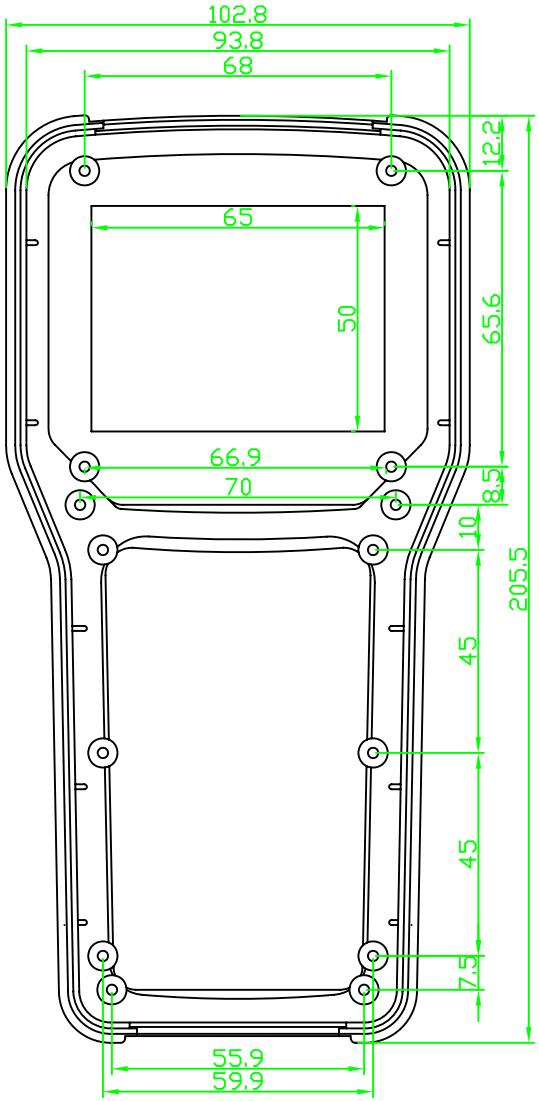

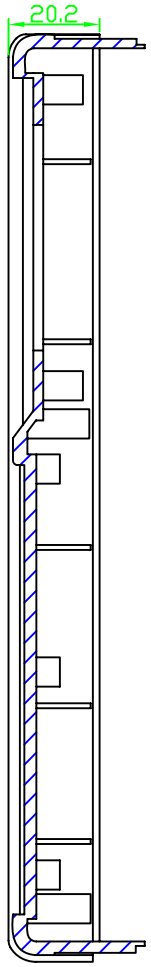

DETACHED LISTS	MM (INCH) TOLERANCES EXCEPT AS NOTED: MM .0 ± 0.3 ± .00 ± 0.2 ± .000 ± 0.1 ±	DFTD	DATE
		CHKD	DATE
		MFD	DATE
		APPVL	DATE
		MATERIAL : ABS	
	ANGLES ± 5°	QT'Y :	
	FIRST ANGLE PROJECTION	FINISH:	
		SCALE : 1:1	

EVEREST
WWW.EVEREST CASE.COM

TITLE
PH034

DRAWING NO. PH034
/PART NO. 00
SIZE A4
REV

DO NOT SCALE DRAWING
SHEET 1 OF 1