REVISION RECORD				
REV	ECO	DESCRIPTION	DRFT	CHKD

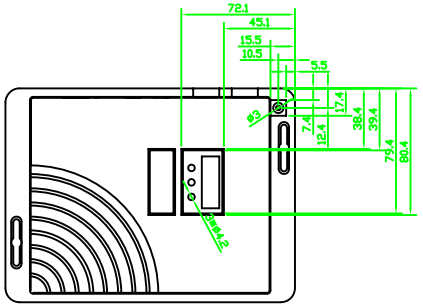

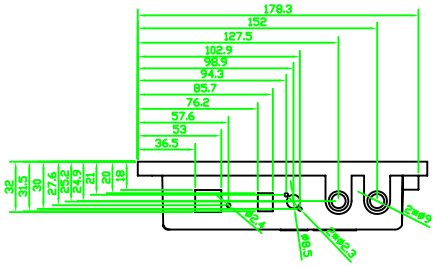

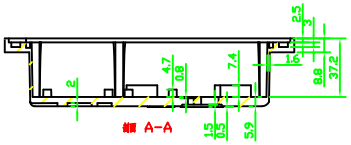

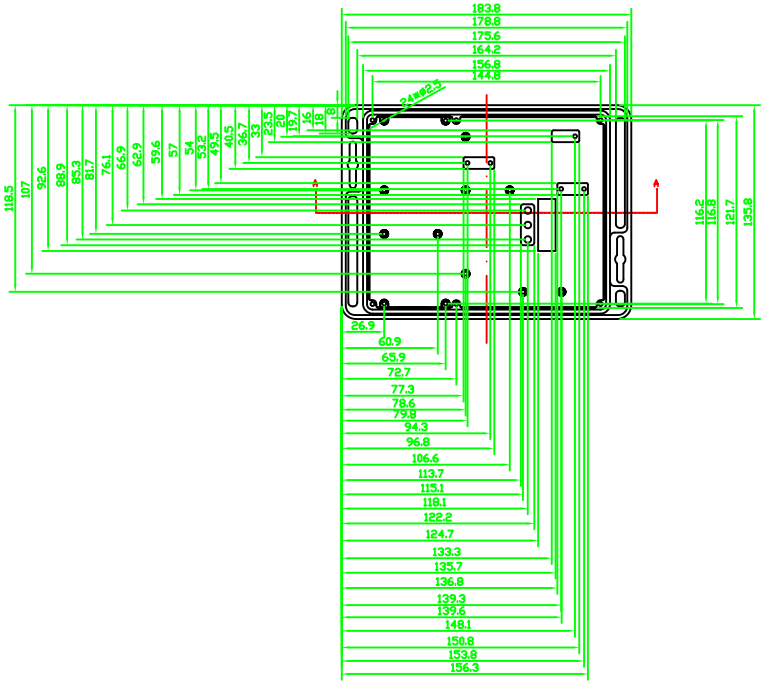

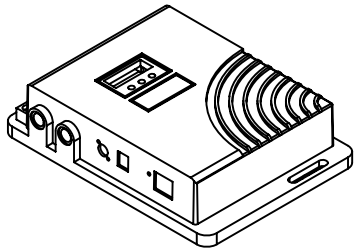

MM (INCH)	DFTD	DATE	EVEREST 埃弗勒斯 WWW.EVEREST CASE.COM
TOLERANCES EXCEPT AS NOTED	CHKD	DATE	
MM .0 ± 0.3 ±	MFD	DATE	TITLE AAP026-s
.00 ± 0.2 ±	APPVL	DATE	
.000 ± 0.1 ±	MATERIAL : AL		
ANGLES ± 5°	QT'Y :		DRAWING NO. AAP026-s / PART NO. 00 — SIZE A4 — REV
FIRST ANGLE PROJECTION	FINISH:		
DETACHED LISTS	SCALE : 1:3		DO NOT SCALE DRAWING — SHEET 1 OF 1

REVISION RECORD				
REV	ECO	DESCRIPTION	DRFT	CHKD

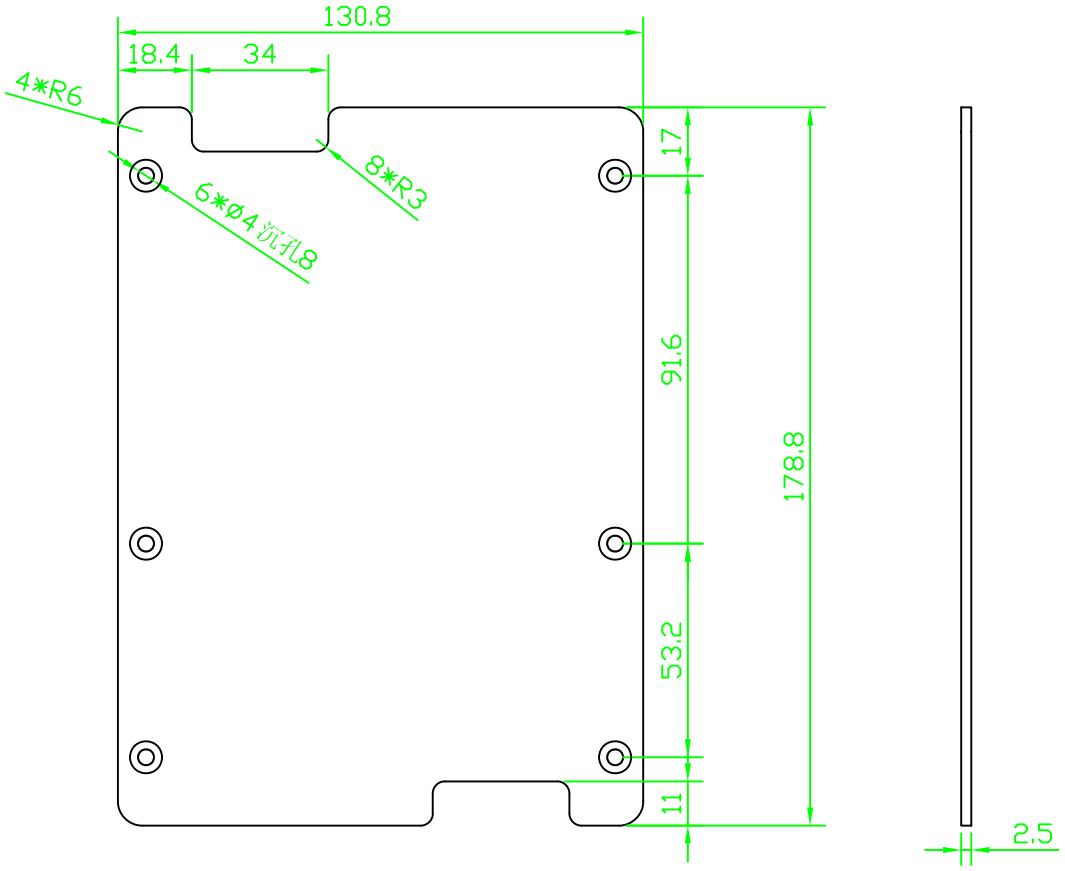

MM (INCH)	DFTD	DATE	EVEREST WWW.EVEREST CASE.COM
TOLERANCES EXCEPT AS NOTED	CHKD	DATE	TITLE
MM .0 ± 0.3 ± .00 ± 0.2 ± .000 ± 0.1 ±	MFD	DATE	AAP026-S
	APPVL	DATE	
	MATERIAL : AL		
ANGLES ± 5°	QT'Y :		DRAWING NO. AAP026-S / PART NO. 00 — SIZE A4 — REV
FIRST ANGLE PROJECTION	FINISH:		
DETACHED LISTS	SCALE : 1:3		DO NOT SCALE DRAWING — SHEET 1 OF 1