REVISION RECORD				
REV	ECO	DESCRIPTION	DRFT	CHKD

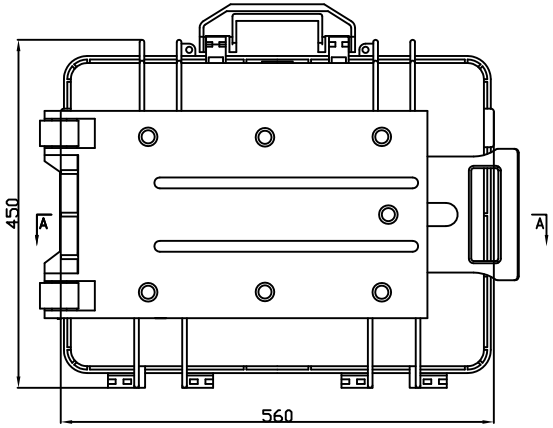

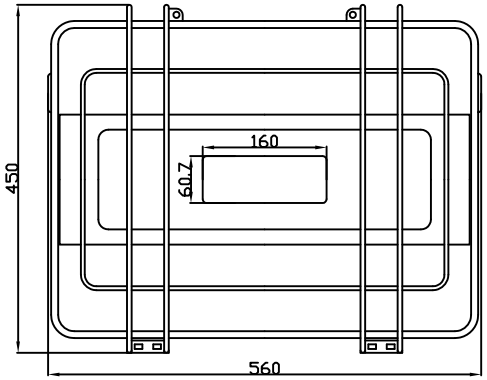

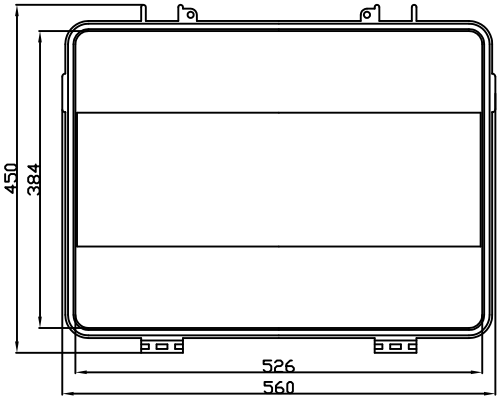

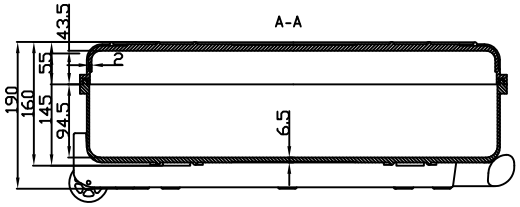

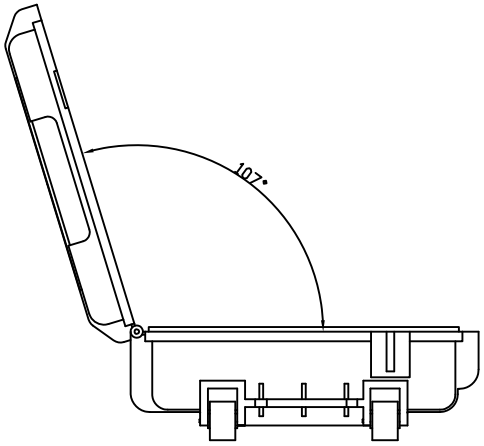

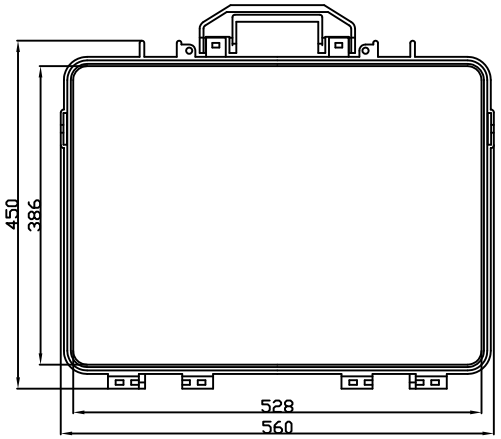

DETACHED LISTS	MM (INCH) TOLERANCES EXCEPT AS NOTED	DFTD	DATE
		CHKD	DATE
		MFD	DATE
		APPVL	DATE
	MM .0 ± 0.3 ± .00 ± 0.2 ± .000 ± 0.1 ±	MATERIAL : ABS	
	ANGLES ± 5°	QT'Y :	
	FIRST ANGLE PROJECTION	FINISH:	
		SCALE : 1:1	

埃弗勒斯 EVEREST

EVEREST

WWW.EVERESTCASE.COM

TITLE

EPC018-1B

DRAWING NO. EPC018-1B

/PART NO. 00

SIZE A4

REV

DO NOT SCALE DRAWING

SHEET 1 OF 1