REVISION RECORD				
REV	ECO	DESCRIPTION	DRFT	CHKD

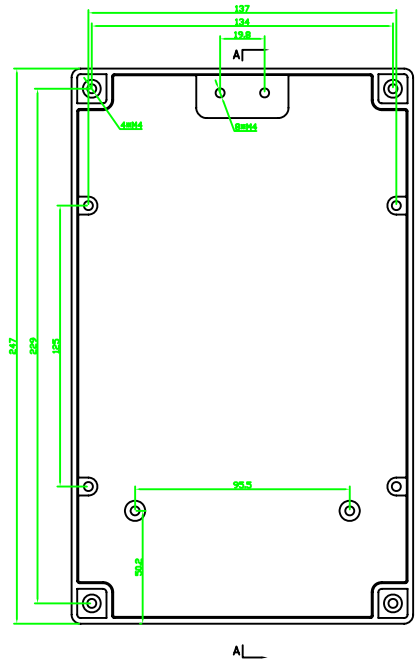

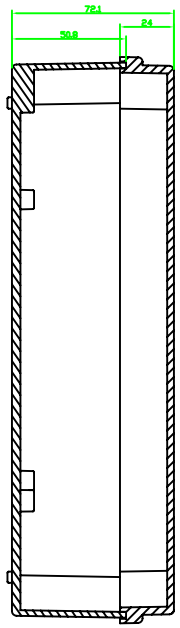

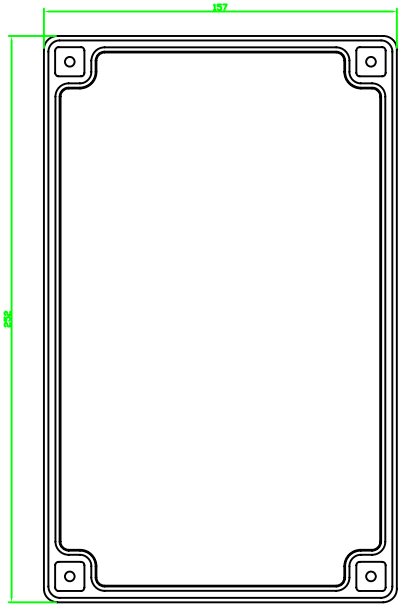

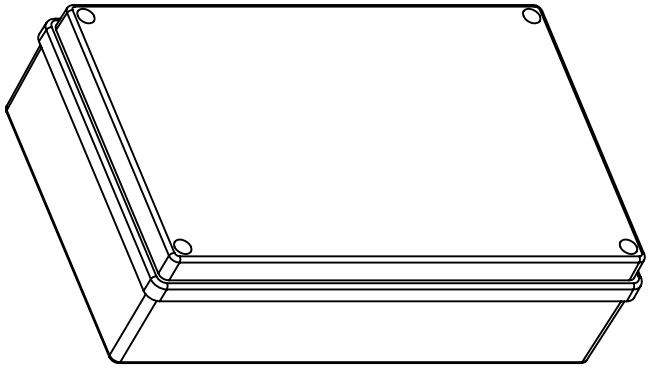

DETACHED LISTS	MM (INCH)	DFTD	DATE
	TOLERANCES EXCEPT AS NOTED	CHKD	DATE
	MM .0 ± 0.3 ±	MFD	DATE
	.00 ± 0.2 ±	APPVL	DATE
	.000 ± 0.1 ±	MATERIAL : AL	
	ANGLES ± 5°	QT'Y :	
	FIRST ANGLE PROJECTION	FINISH:	
		SCALE : 1:1	

埃弗勒斯 EVEREST

EVEREST
WWW.EVERESTCASE.COM

TITLE
AW041

DRAWING NO. AW041	SIZE	REV
/PART NO. 00	A4	
DO NOT SCALE DRAWING	SHEET 1 OF 1	