REVISION RECORD				
REV	ECO	DESCRIPTION	DRFT	CHKD

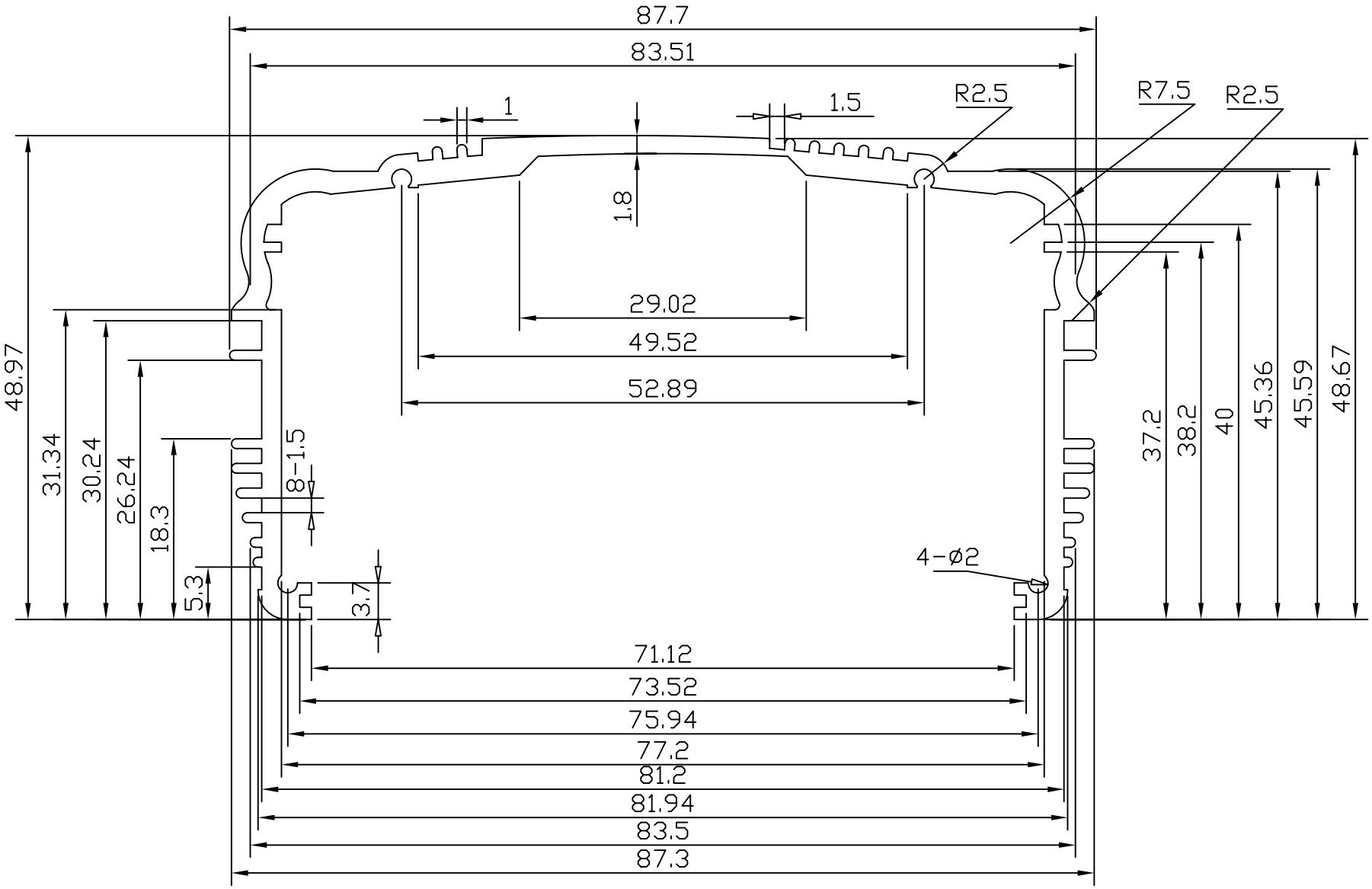

DETACHED LISTS	MM (INCH) TOLERANCES EXCEPT AS NOTED	DFTD	DATE
		CHKD	DATE
		MFD	DATE
	MM .0 ± 0.3 ± .00 ± 0.2 ± .000 ± 0.1 ±	APPVL	DATE
	ANGLES ± 5°	MATERIAL : AL	
		QT'Y :	
	THIRD ANGLE PROJECTION	FINISH:	
		SCALE : 1:1	

EVEREST
WWW.EVERESTCASE.COM

TITLE
AEH099

DRAWING NO. AEH099
/PART NO. 00

SIZE A4 REV

DO NOT SCALE DRAWING

SHEET 1 OF 1