REVISION RECORD				
REV	ECO	DESCRIPTION	DRFT	CHKD

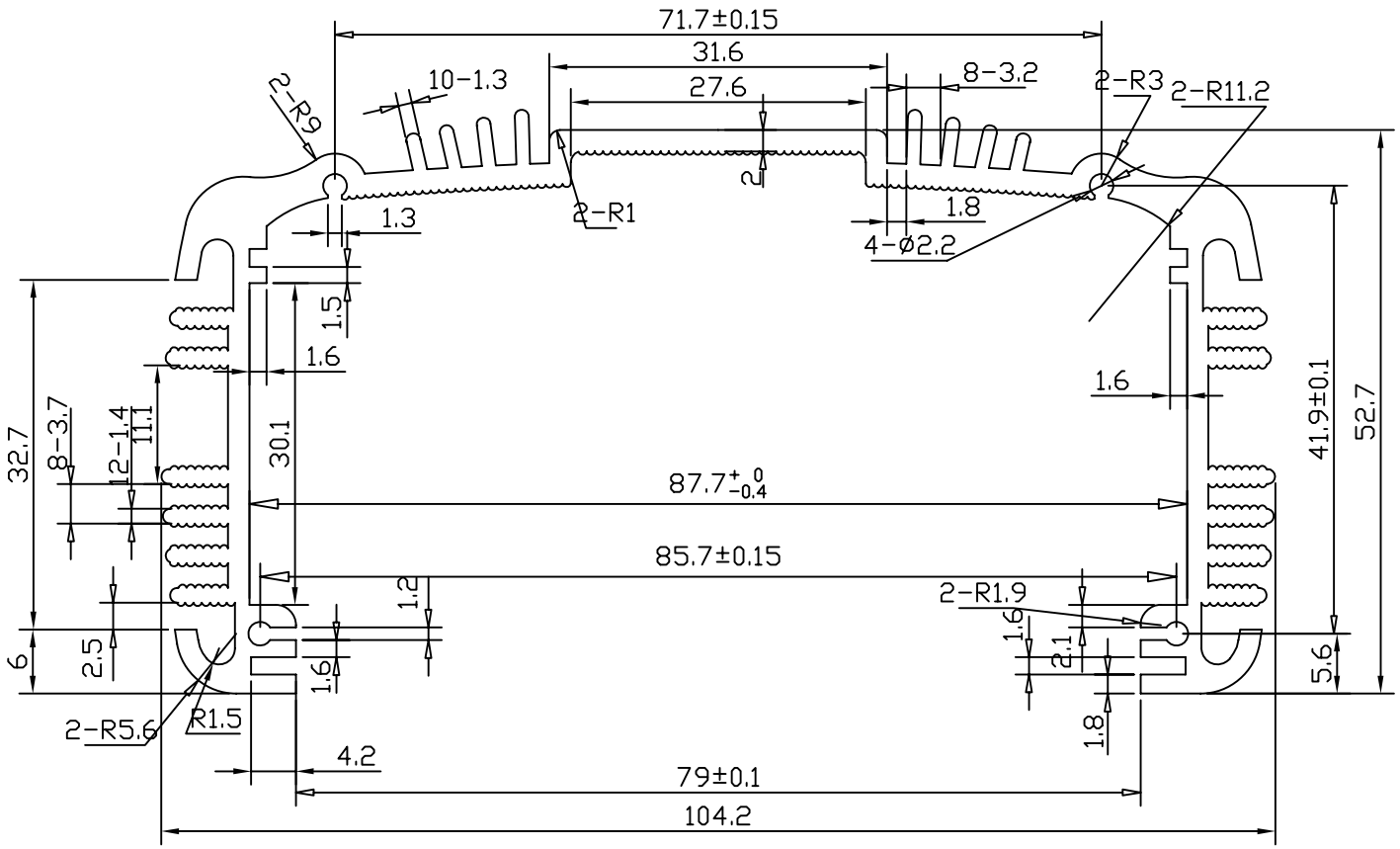

DETACHED LISTS	MM (INCH) TOLERANCES EXCEPT AS NOTED	DFTD	DATE
		CHKD	DATE
		MFD	DATE
	MM .0 ± 0.3 ± .00 ± 0.2 ± .000 ± 0.1 ±	APPVL	DATE
	ANGLES ± 5°	MATERIAL : AL	
	THIRD ANGLE PROJECTION	QT'Y :	
		FINISH:	
		SCALE : 1:1	

埃弗勒斯 EVEREST

EVEREST

WWW.EVEREST CASE.COM

TITLE

AEH101

DRAWING NO. AEH101 /PART NO. 00

SIZE A4 REV

DO NOT SCALE DRAWING

SHEET 1 OF 1