REVISION RECORD				
REV	ECO	DESCRIPTION	DRFT	CHKD

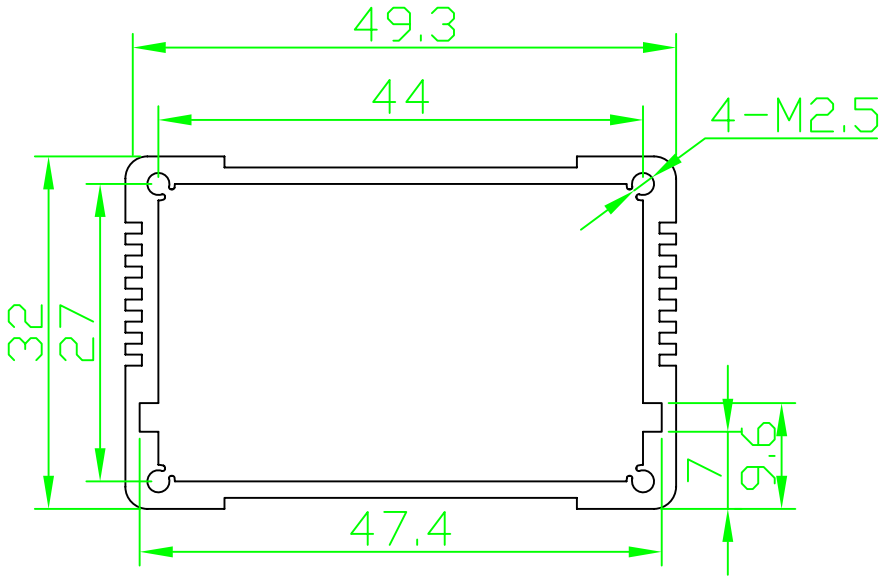

DETACHED LISTS	MM (INCH) TOLERANCES EXCEPT AS NOTED	DFTD	DATE
		CHKD	DATE
		MFD	DATE
		APPVL	DATE
	MM .0 ± 0.3 ± .00 ± 0.2 ± .000 ± 0.1 ±	MATERIAL : AL	
	ANGLES ± 5°	QT'Y : 1	
	FIRST ANGLE PROJECTION	FINISH:	
		SCALE : 1:1	

埃弗勒斯 EVEREST

EVEREST
WWW.EVERESTCASE.COM

TITLE
AEH168

DRAWING NO. AEH168	SIZE	REV
/PART NO.	A4	
DO NOT SCALE DRAWING	SHEET X OF Y	